ADEPTRANS CADENAS Y TRANSMISIONES

Primary Packaging

Product Catalogue

FREDRIKSONS

Bringing Good Things Ahead

www.adeptrans.es · +34 916 926 286 · info@adeptrans.es

Contents

Welcome.....3
Primary Packing System.....4
Legs.....6
Conveyor Chains.....7
Service Tools.....8
Cost and Environmental Efficiency.....9
Product Range.....10
Adjustable Conveyor Links.....11
Glide Curves.....12
Wheel Curves.....14
Drive Unit with Tensioner.....16
Drive Unit Short Chain Slack.....17
Drive and End Unit With Chain Tensioner.....18
Drive and End Unit With Chain Slack.....19
Drive and End Unit Motor on Top.....20
End Unit.....21
Belt Brake.....22
Manuel Switch.....23
Telescopic Conveyor.....24
Straight Conveyor.....25
Straight Conveyor with Tensioner.....23
Package Trap.....27
Blow Off with Air.....28
Joint Kit.....29
Accumulator.....30
Vertical Conveyor Unit.....31

Primary Packaging System

Our conveyors are based on a stainless steel body with low friction slide rails guiding and plastic multi-flex chain. Products to be conveyed travel directly on a conveyor, or on pallets/carriers. Products handled have a weight from a few grams up to 30 kg. The packages are of following material:

- Carton
- Plastic
- Metal
- Glass

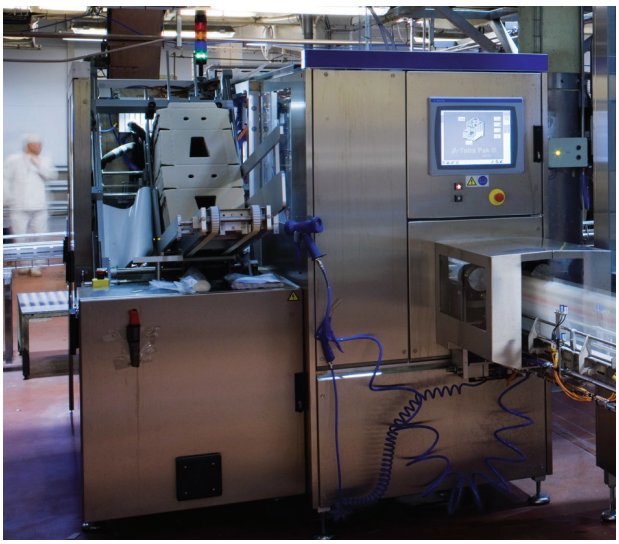

Material			
Stainless steel	EN 1.4301	ASTM 301	SS2333

www.adeptrans.es · +34 916 926 286 · info@adeptrans.es

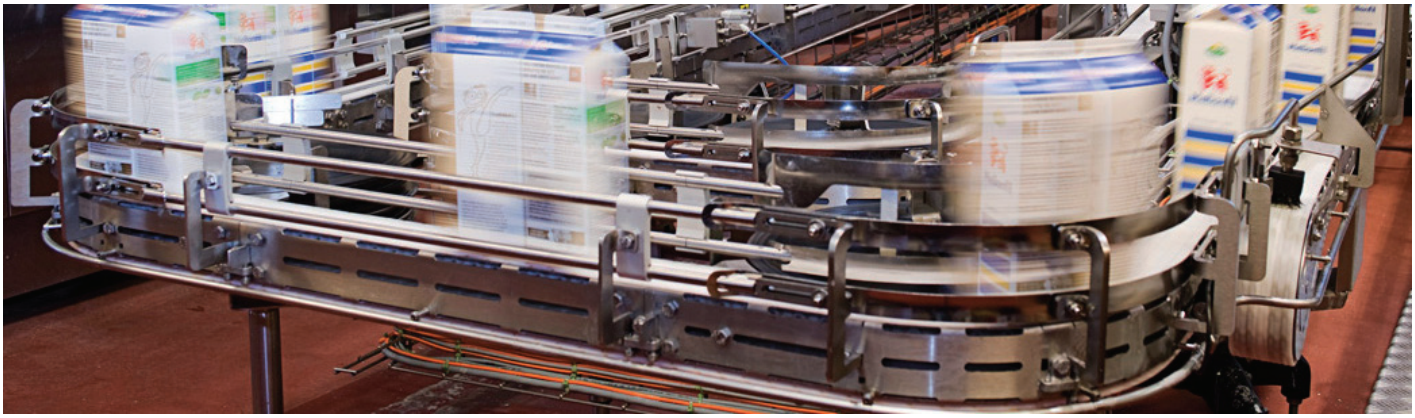

Our conveyor system for primary packaging, FC 70, has a superior hygienic design. The side plates of the conveyor body have been designed with extra holes to facilitate easy cleaning, inspection and draining.

The conveyor width is adjustable from 40-110 mm. Recommended rail width is package width + max 10%, max 6 mm. FC70 has a solid, robust construction and can easily be adjusted to particular needs.

Our standard conveyor body with side bars are flexible according to customers requests and needs regarding goods to be conveyed.

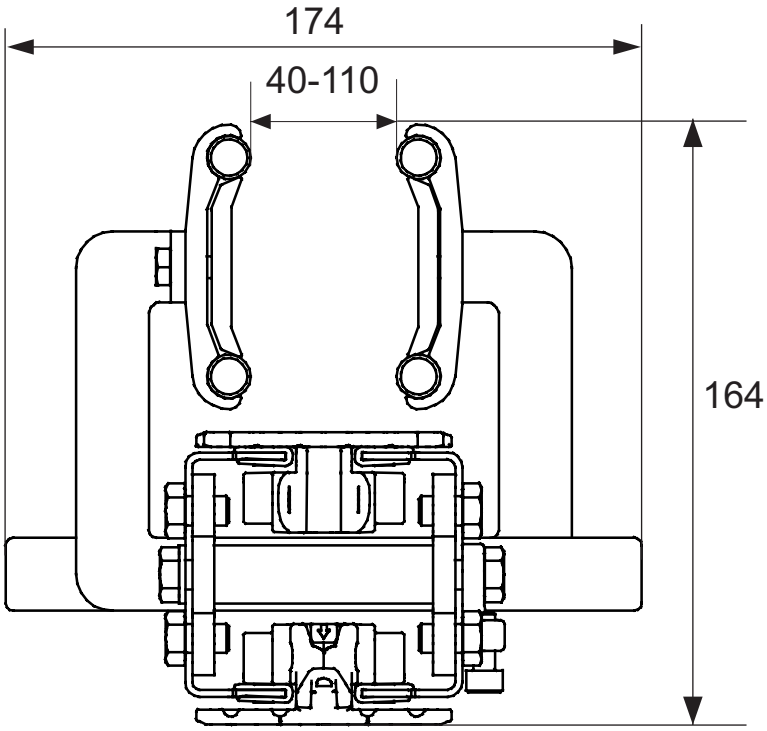

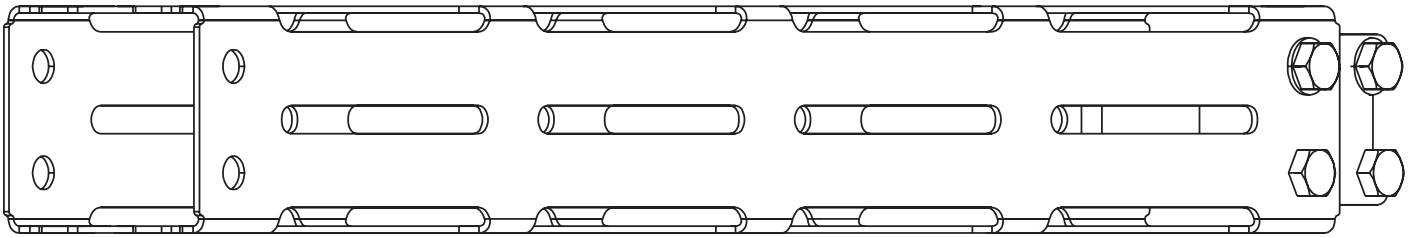

Legs

We recommend to use Fredrikson hygiene extendable leg system for the FC 70 conveyors and motor legs

Guidelines for placement of legs:

- One standard leg in centre of each curve
- One leg for each package trap
- One leg for every 2-3 m
- One motorleg for each belt brake
- One motorleg for each motor

Hygiene Legs

Part number	Variants	Materials	Height
F208800-101	single	stainless steel	H=515-690
F208800-102	single	stainless steel	H=690-1040
F208800-103	single	stainless steel	H=1040-1740
F209113-101	double	stainless steel	H=600-775
F209113-103	double	stainless steel	H=775-1125
F209113-105	double	stainless steel	H=1125-1825

Motor Legs

Part number	Variants	Materials	Height
F205934-101	single	stainless steel	H=500-700
F205934-102	single	stainless steel	H=700-1000
F205934-103	single	stainless steel	H=1000-1400

www.adeptrans.es · +34 916 926 286 · info@adeptrans.es

Conveyor Chain for FC 70

FT 70 is a new developed improved plastic chain according to safety regulations standard BS EN619.

For more information regarding our range of plastic chains, please check our Chains catalogue.

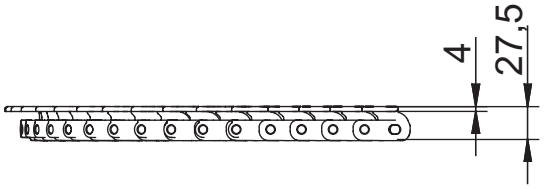

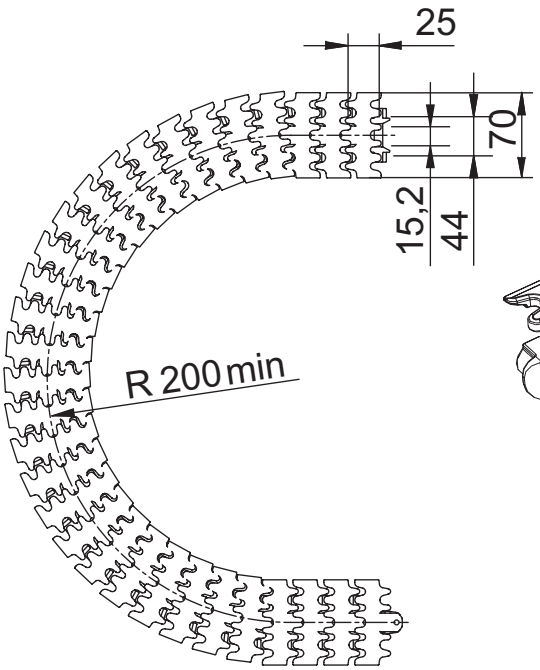

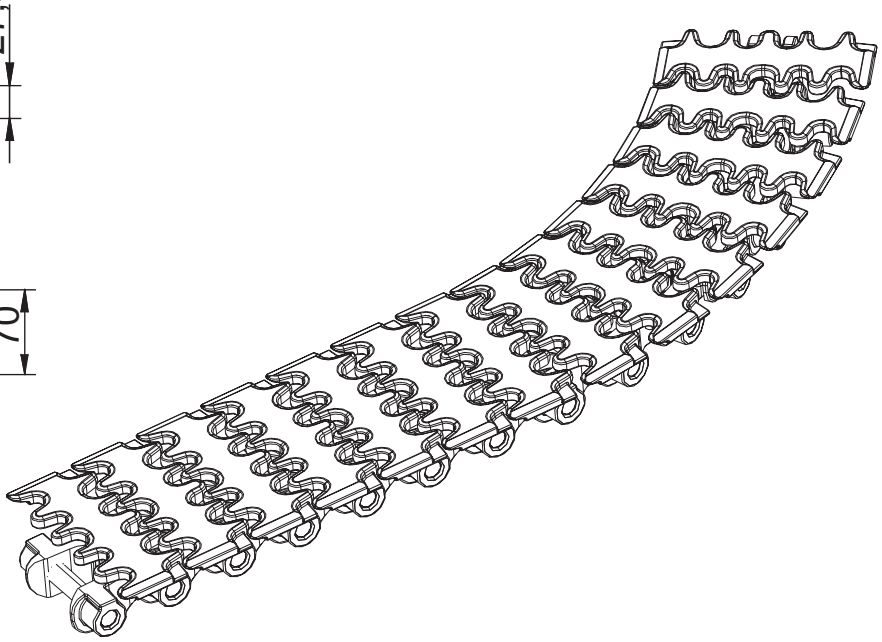

Part number	Materials	Length (L)	Weight	Width	Volume
3019400-0101	POM	10 m per box	16 kg /10 m	70 mm	20 dm^3/10 m

Service Tools for FC 70

Chain Tool

For splitting and joining chains.
Part number: F2561208-2

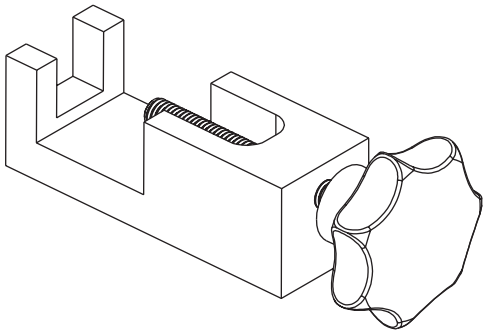

Sliding Strip

Sliding strips are used on the conveyors to reduce friction and are secured with the screw.
Part number: F205219

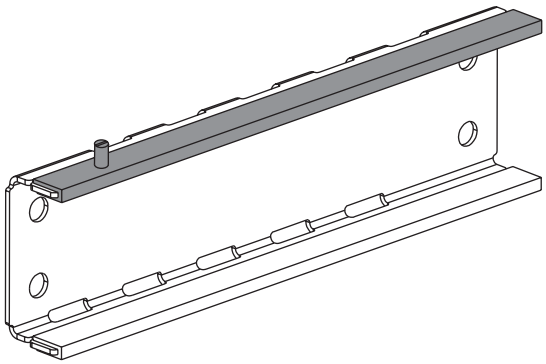

Cost and Environmental Efficiency in Our Systems

In a complete conveyor system it is important not to exceed the distance between drive and end unit. The table below shows the different component values equal to the resistance compared to a straight conveyor. The total lenght of the components between drive and end unit must not exceed for singel packs: 20 m.

Due to environmental considerations we recommend wheel curves before glide curves. A lower friction reduces the energi consumption and wear.

Component	Lenght (m)
Straight conveyor	3,0
Drive unit	0,75
Drive and End unit	1,0
End unit	0,5
Package trap	1,5
Glide Curve 15º	2,0
Glide Curve 45º	2,5
Wheel Curve 45º	1,0
Wheel Curve 90º	1,5
Wheel curve 180º	2,5
Switch	1,5-1,75

Product Range

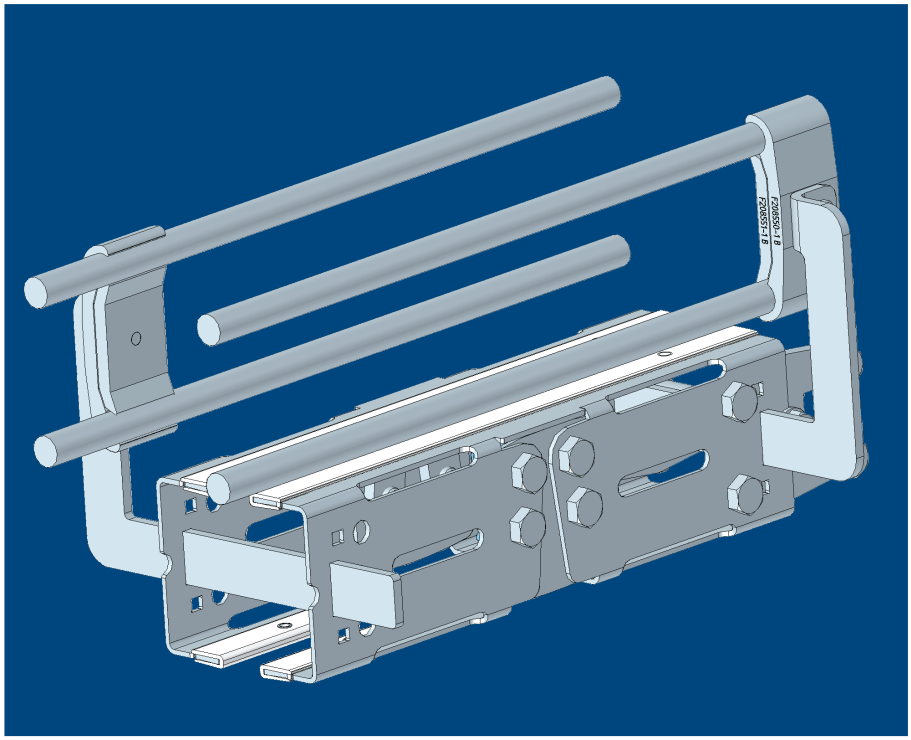

Adjustable Conveyor Link +/- 15º

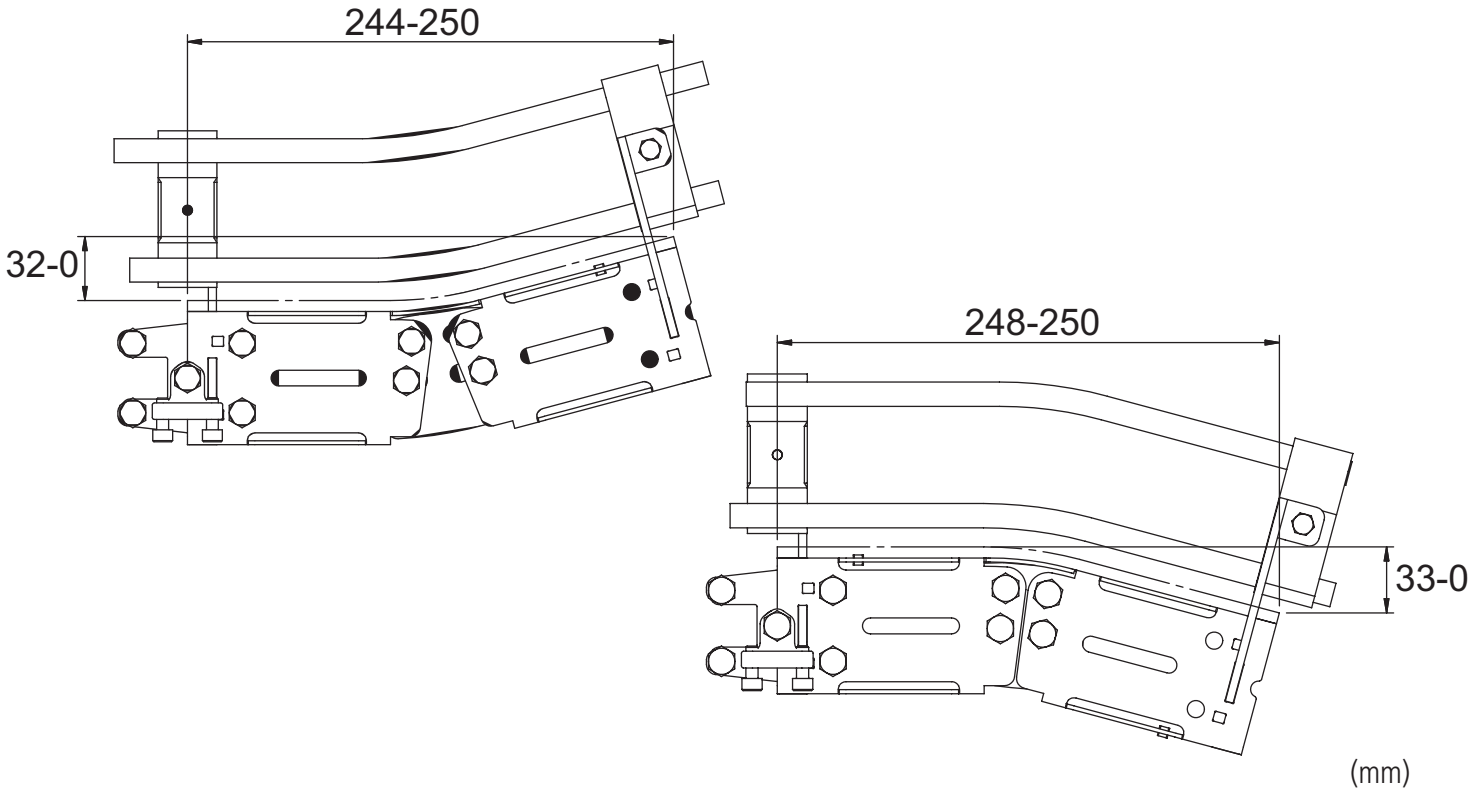

Part number	Chain Lenght m	Volume dm^3	Weight kg
F208434-101	0,5	3,0	2,5

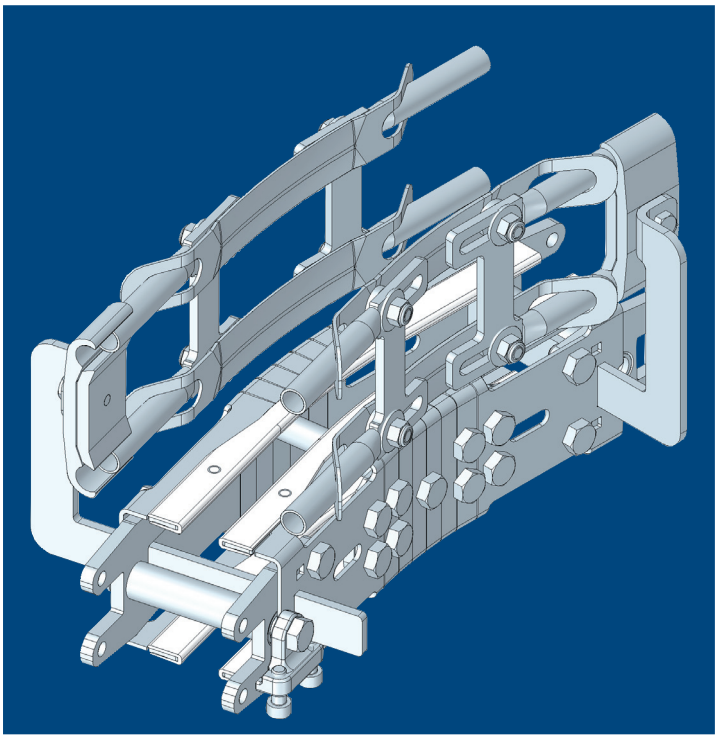

Glide Curve

Glide curves are available as
0-15°, 15°, 30°, 45° and 90°

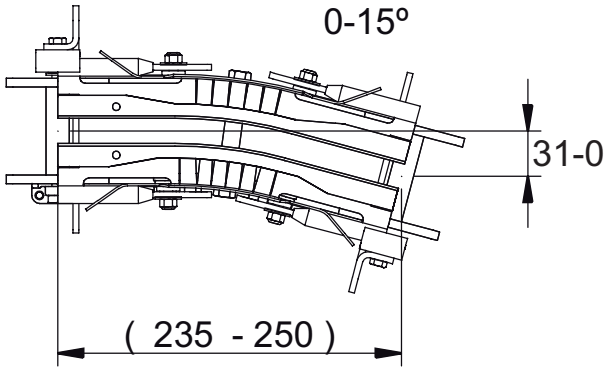

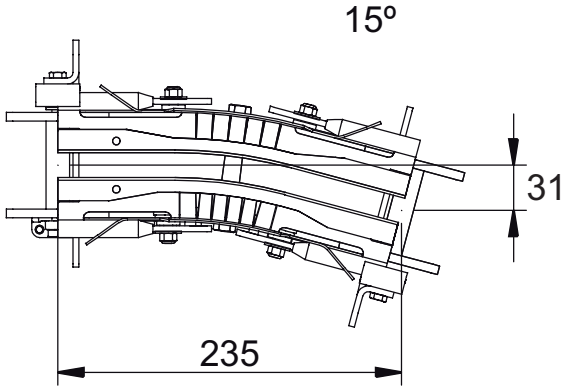

(mm)

Part number	Variants °	Chain Lenght m	Volume dm^3	Weight kg
F208435-101	0-15	0,5	10,9	2,0
F208435-102	15	0,5	10,9	2,0
F208435-103	45	1,5	28,4	3,5
F208435-104	90	2,3	100	7,0
F208435-105	30	1,1	25,0	3,0

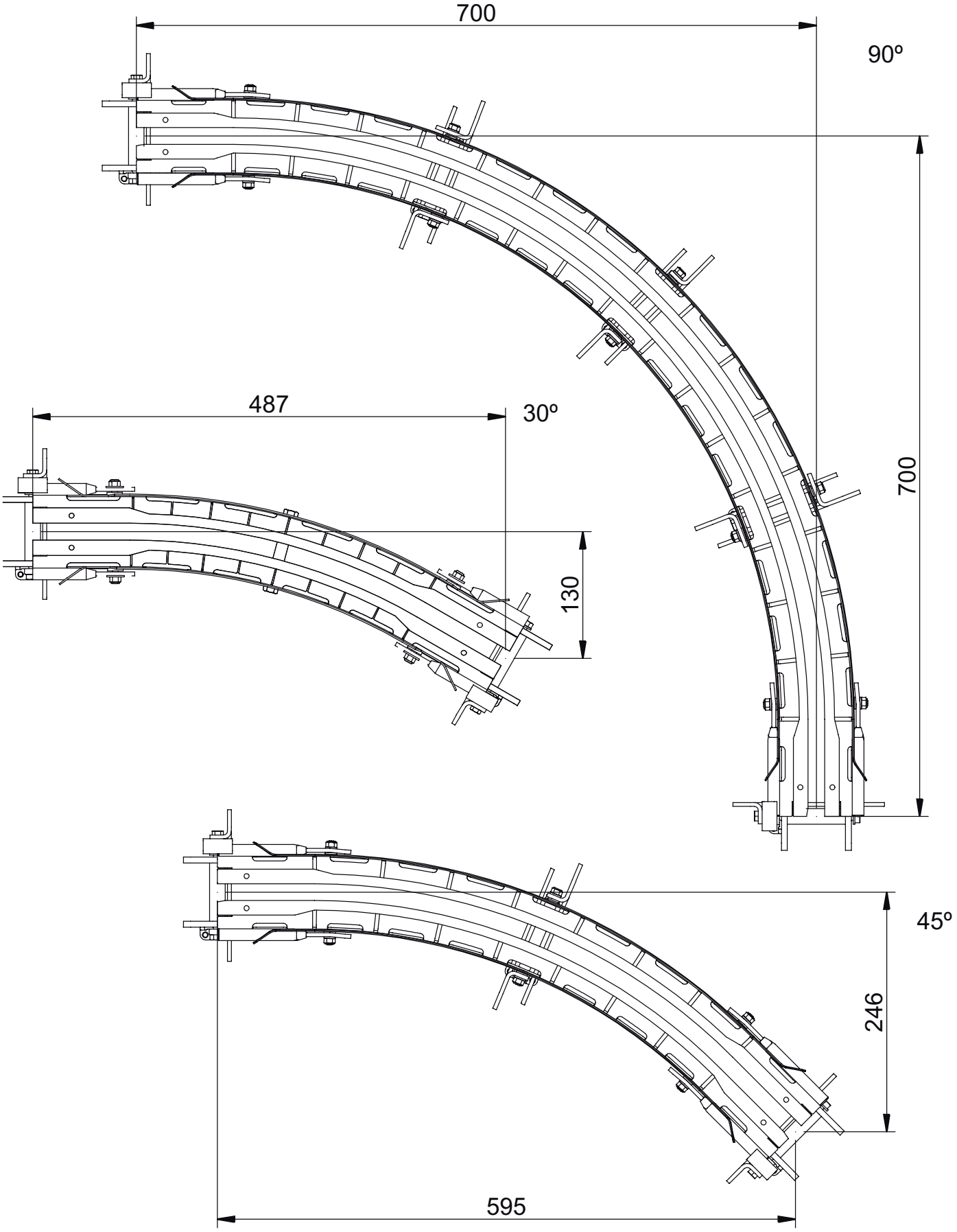
700
90º
700
487
30º
130
45º
246
595
(mm)

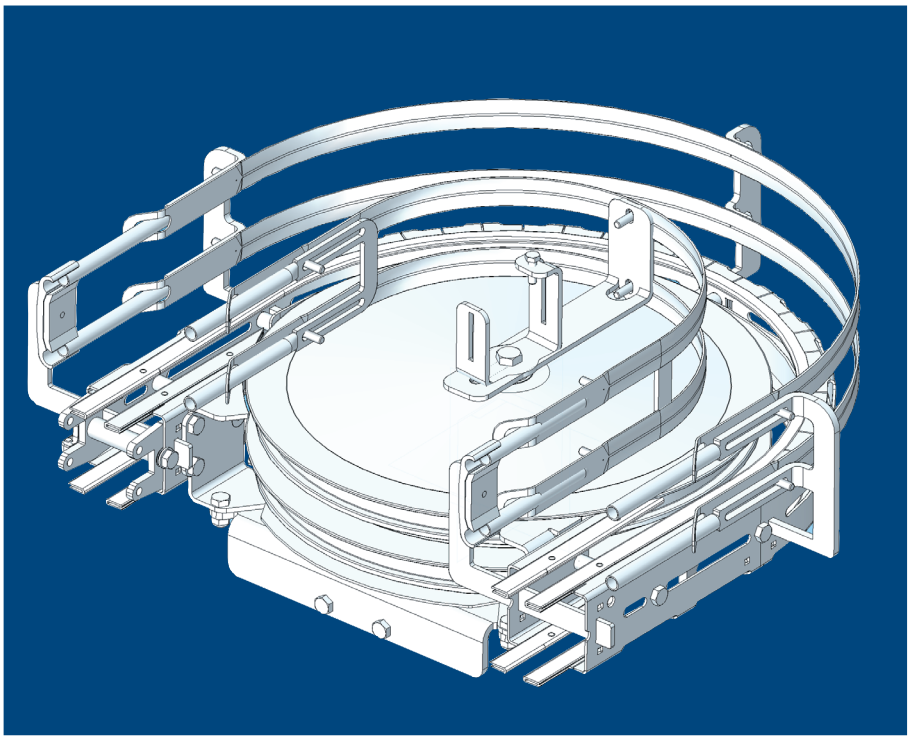

Wheel Curves

Wheel curves are available as 45°, 90° and 180°

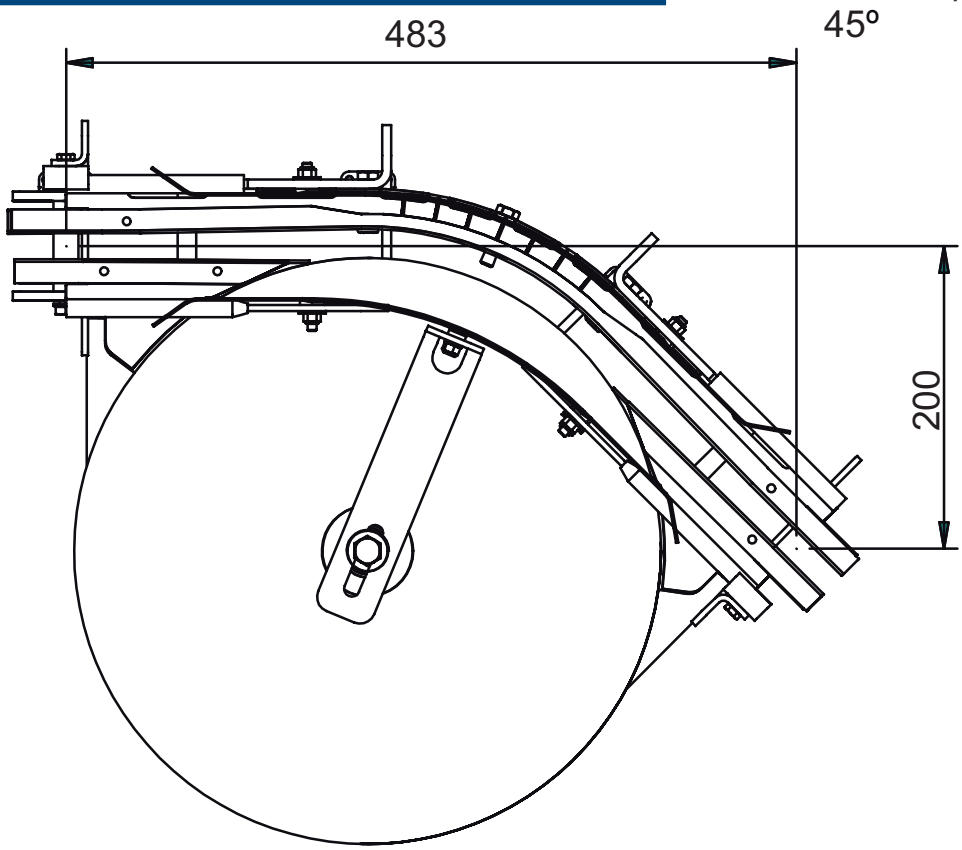

(mm)

Part number	Variants °	Chain Lenght m	Volume dm^3	Weight kg
F208436-104	45	1,2	77,5	17,5
F208436-105	90	1,5	77,5	18,7
F208436-106	180	2,1	77,5	18,8

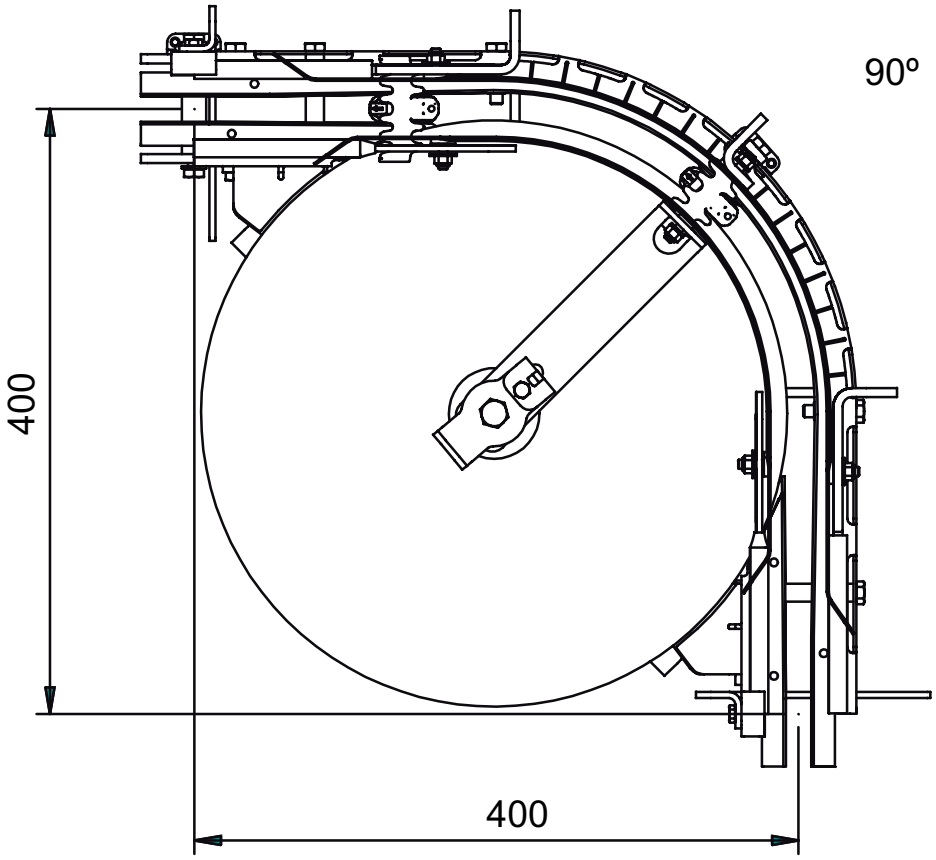

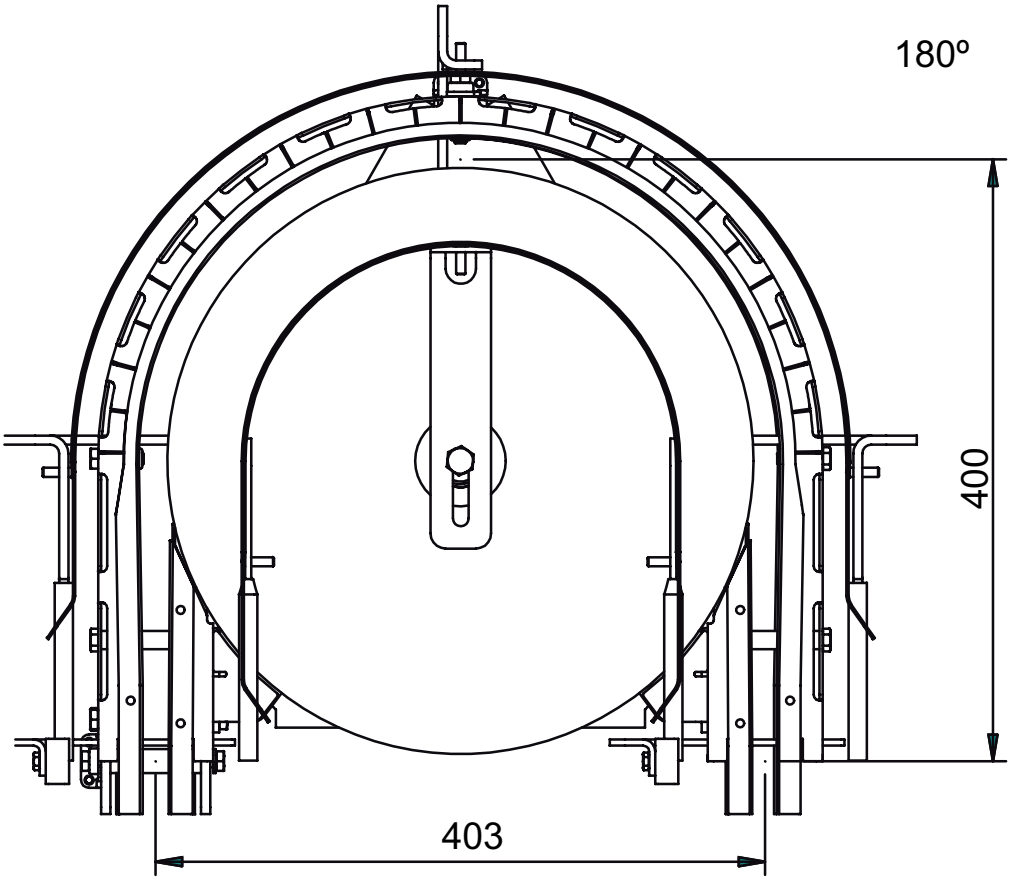

(mm)

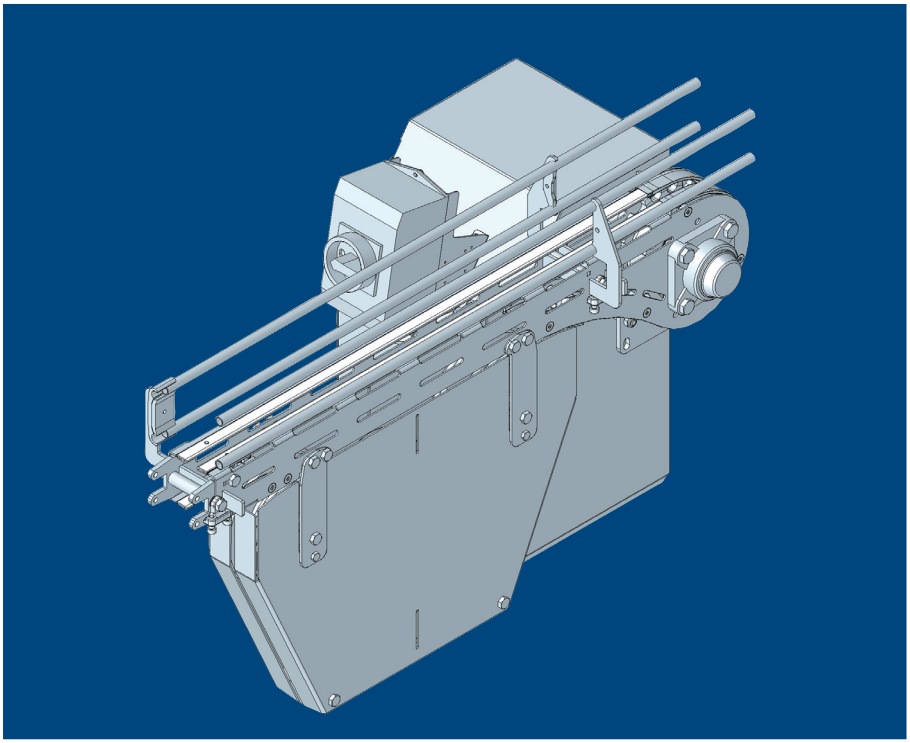

Drive Unit with Tensioner

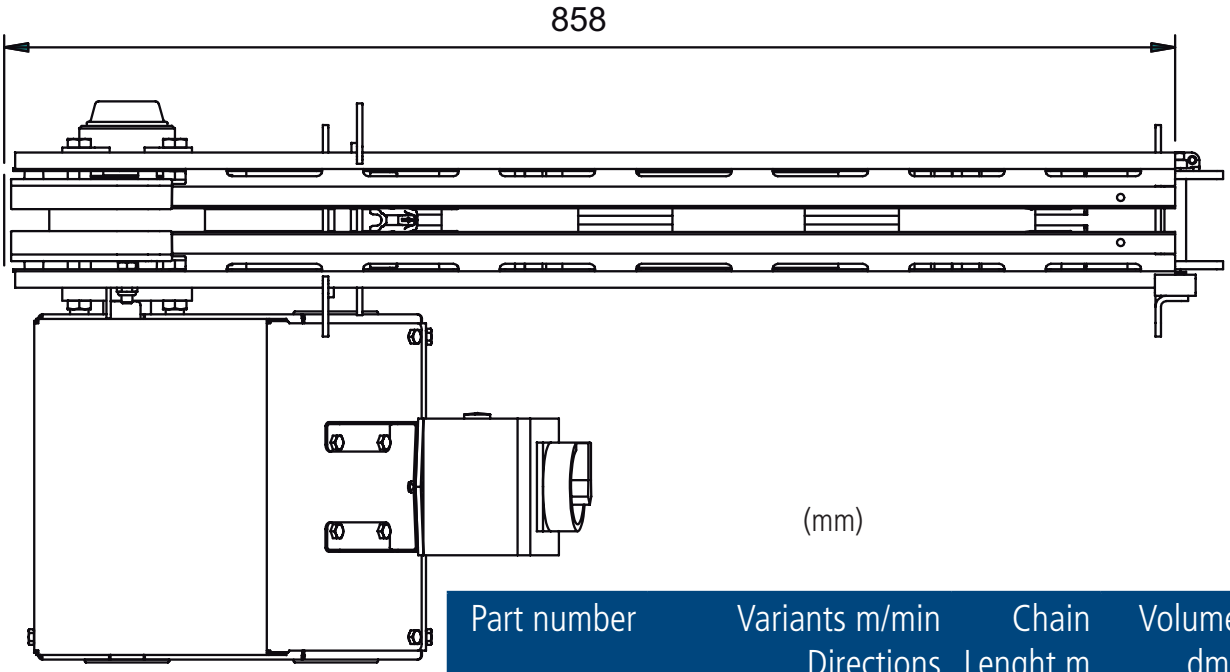

(mm)

Part number	Variants m/min Directions	Chain Lenght m	Volume dm^3	Weight kg
F208437-101	20 / Left	2,6	220	58
F208437-102	20 / Right	2,6	220	58
F208437-103	10-40 / Left	2,6	220	58
F208437-104	10-40 / Right	2,6	220	58
F208437-105	7,65 / Left	2,6	220	58
F208437-106	7,65 / Right	2,6	220	58
F208437-111	Without motor*/Left	2,6	220	58
F208437-112	Without motor*/Right	2,6 m	220	58

*Speed after recommendation

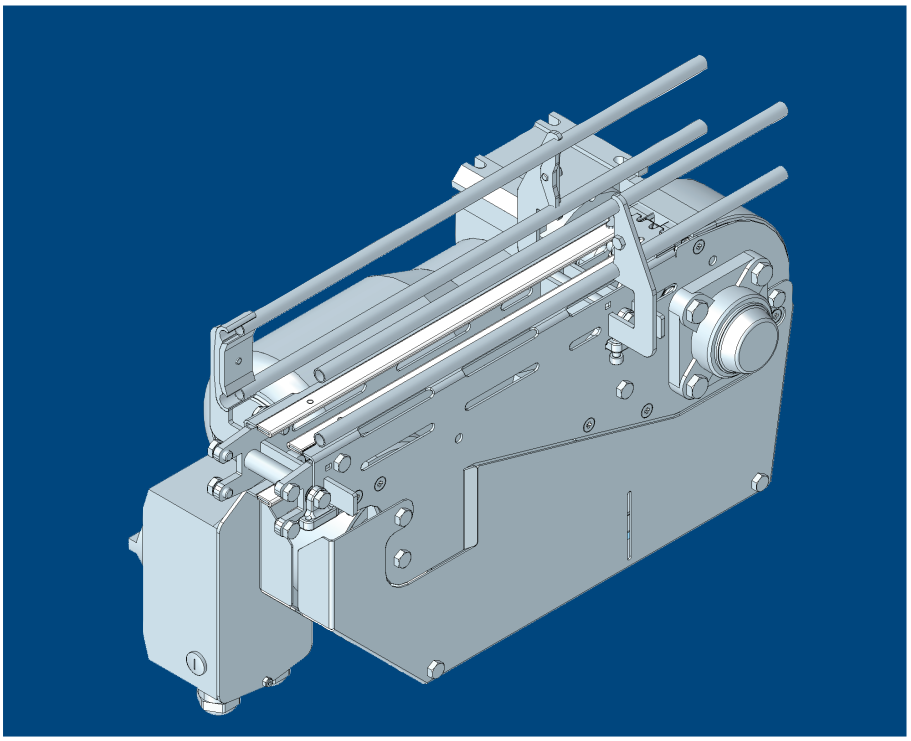

Drive Unit Short Chain Slack

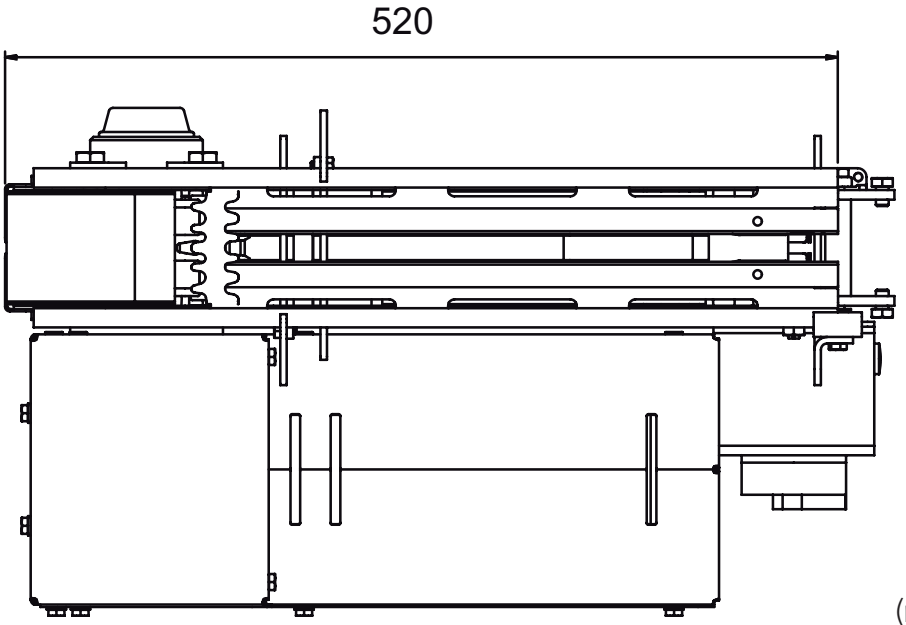

(mm)

Part number	Variants m/min Directions	Chain Lenght m
F208439-101	20 / Left	1,2
F208439-102	20 / Right	1,2
F208439-111	Drip proof without motor / Left	1,2
F208439-112	Drip proof without motor / Right	1,2
F208439-113	Without motor*/Left	1,2
F208439-114	Without motor*/Right	1,2

*Speed after recommendation

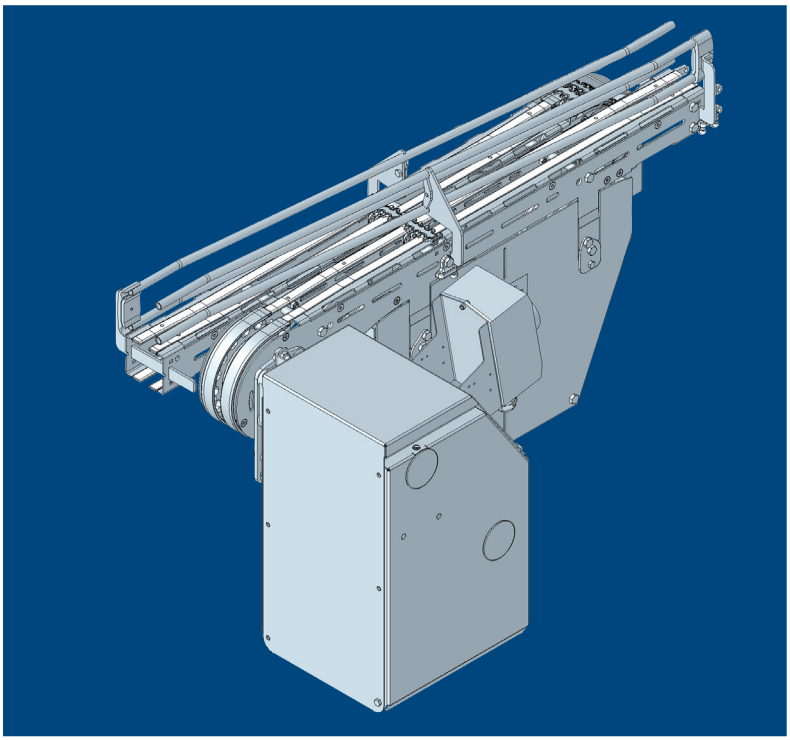

Drive and End Unit With Chain Tensioner

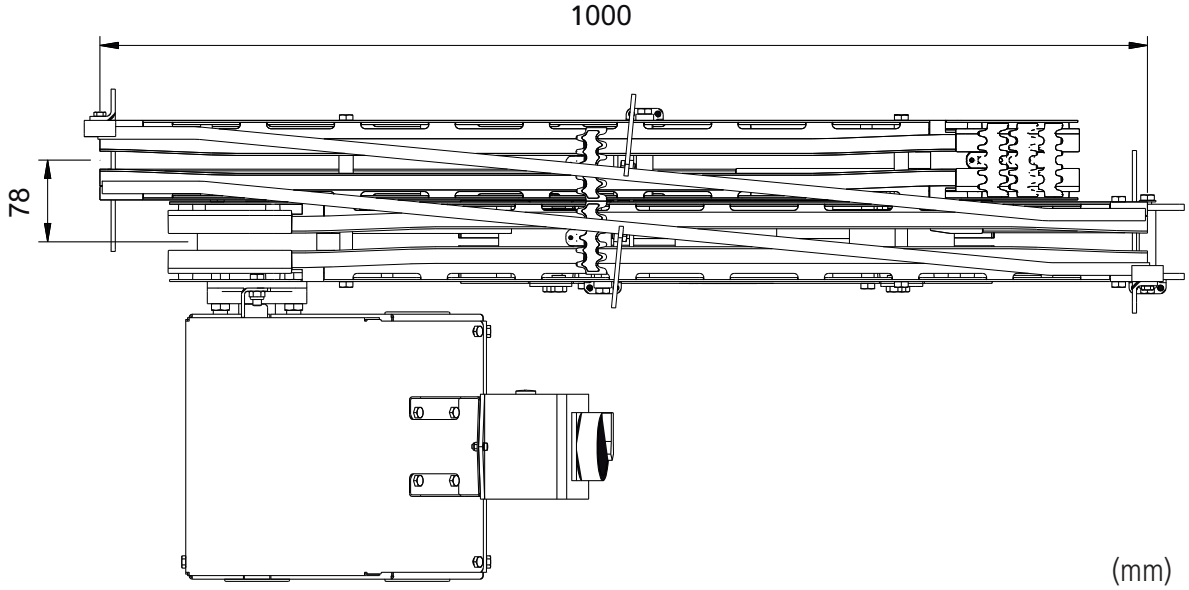

(mm)

Part number	Variants m/min Directions	Chain Lenght m	Volume dm³	Weight kg
F208440-101	20 / Left	5	270	66
F208440-102	20 / Right	5	270	66
F208440-103	10-40 / Left	4,8	270	66
F208440-104	10-40 / Right	4,8	270	66
F208440-105	15 / Left	4,8	270	66
F208440-106	15 / Right	4,8	270	66
F208440-111	Without motor*/Left	4,8	270	66
F208440-112	Without motor*/Right	4,8	270	66

*Speed after recommendation

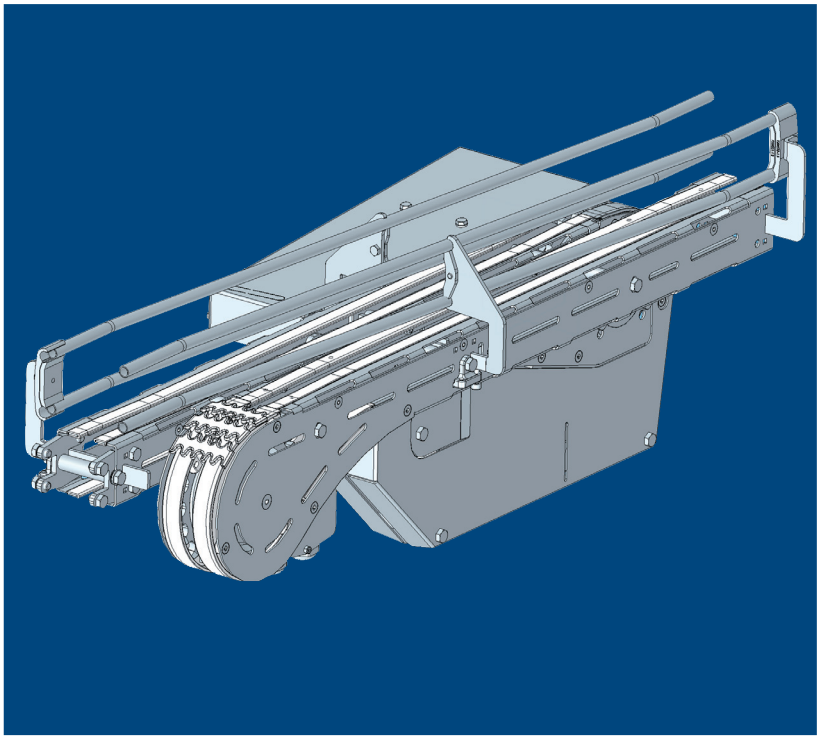

Drive and End Unit With Chain Slack

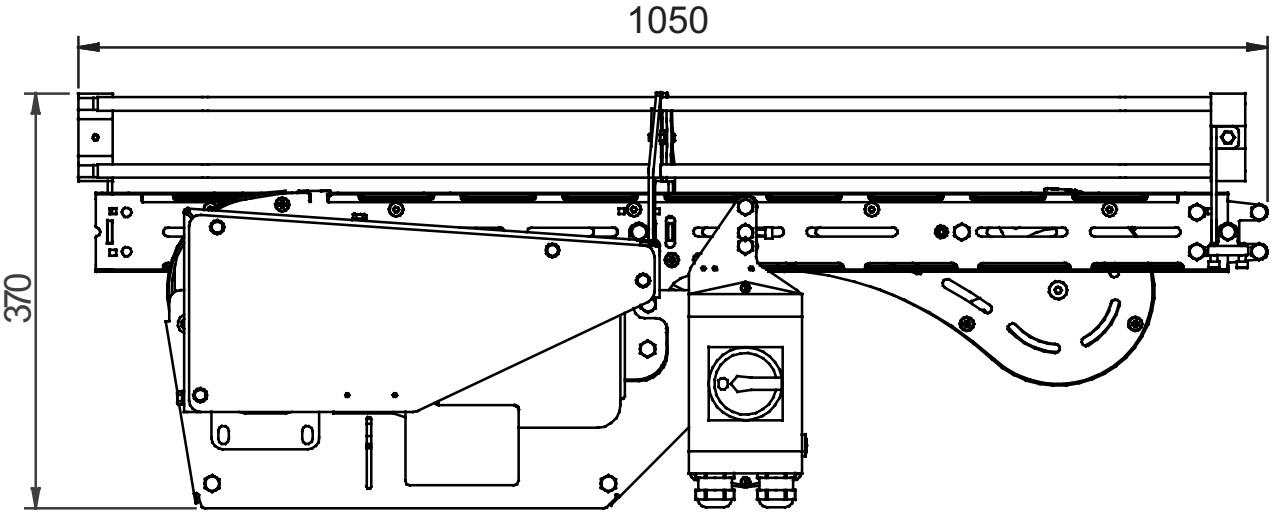

Part number	Variants m/min Directions	Chain Lenght m	Volume dm^3	Weight kg
F208441-101	20 / Left	5	140	35
F208441-102	20 / Right	5	140	35

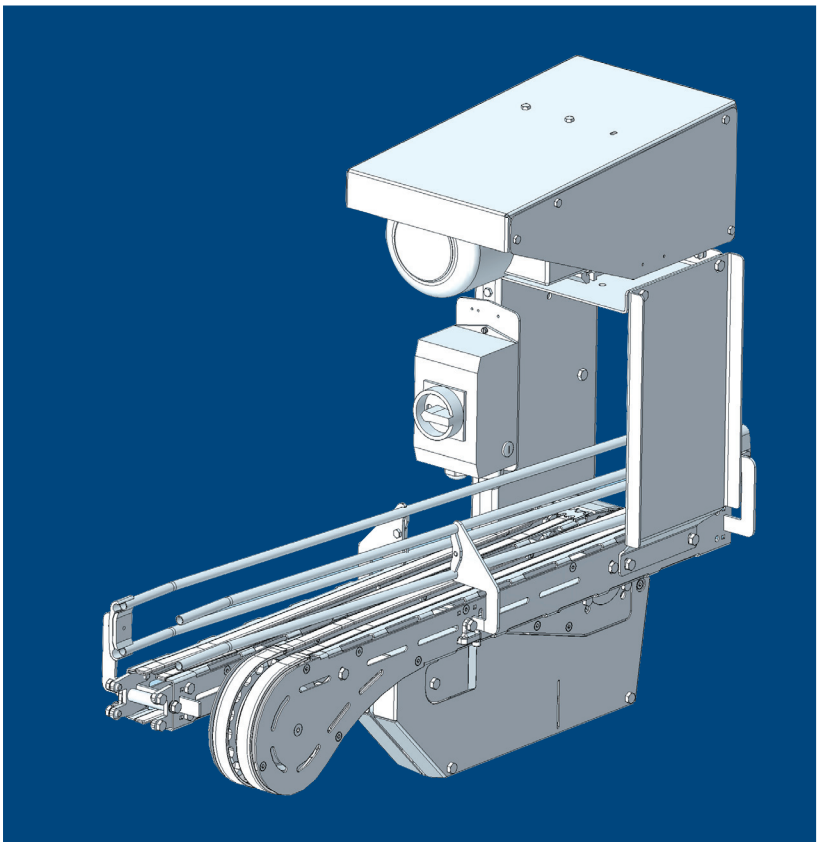

Drive and End Unit
Motor on Top

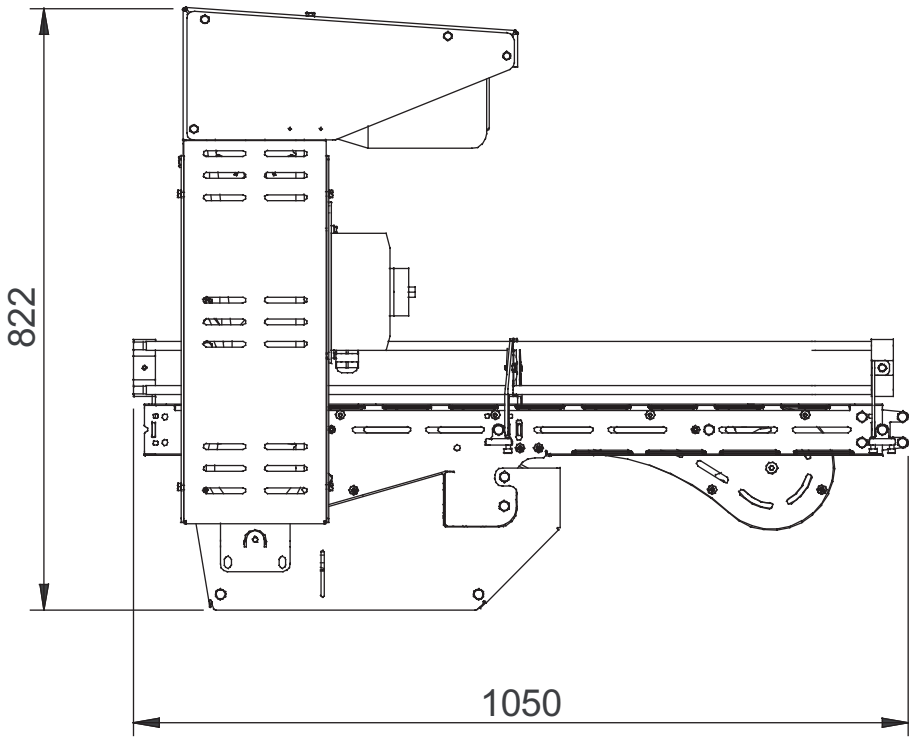

Part number	Variants m/min Directions	Chain Lenght m	Volume dm^3	Weight kg
F208447-101	20 / Left	5	825	94
F208447-102	20 / Right	5	825	94

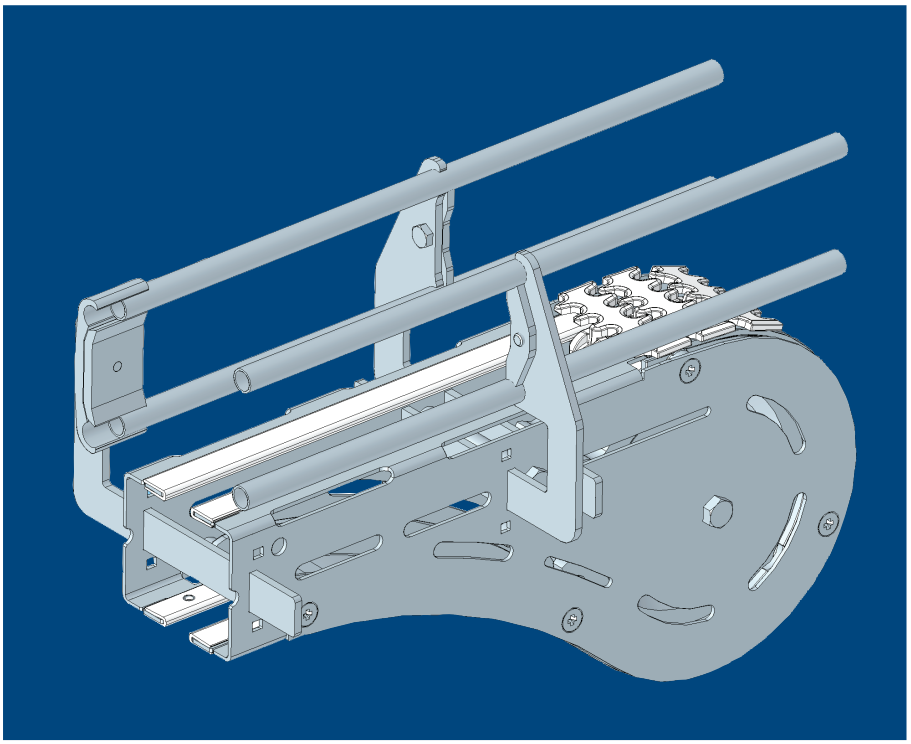

End Unit

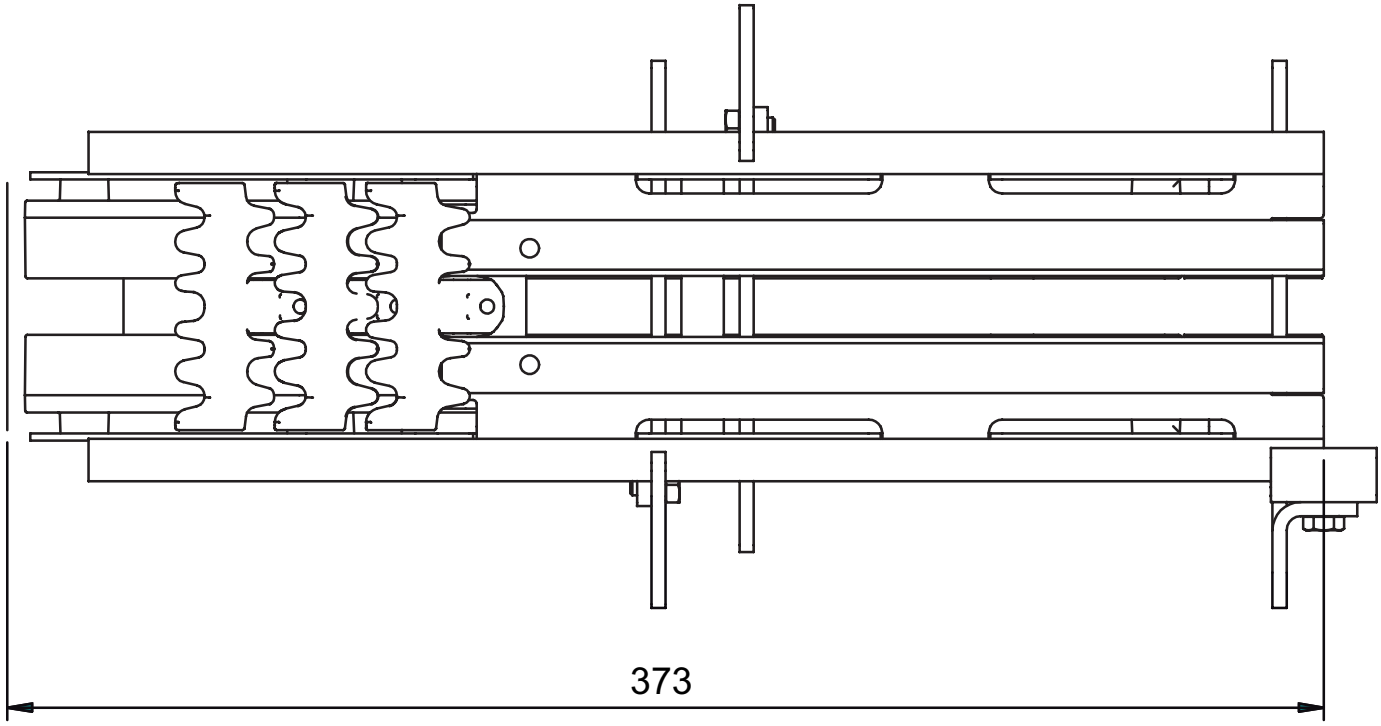

(mm)

Part number	Chain Lenght	Volume dm^3	Weight kg
F208442-101	0,9 m	35	6,5

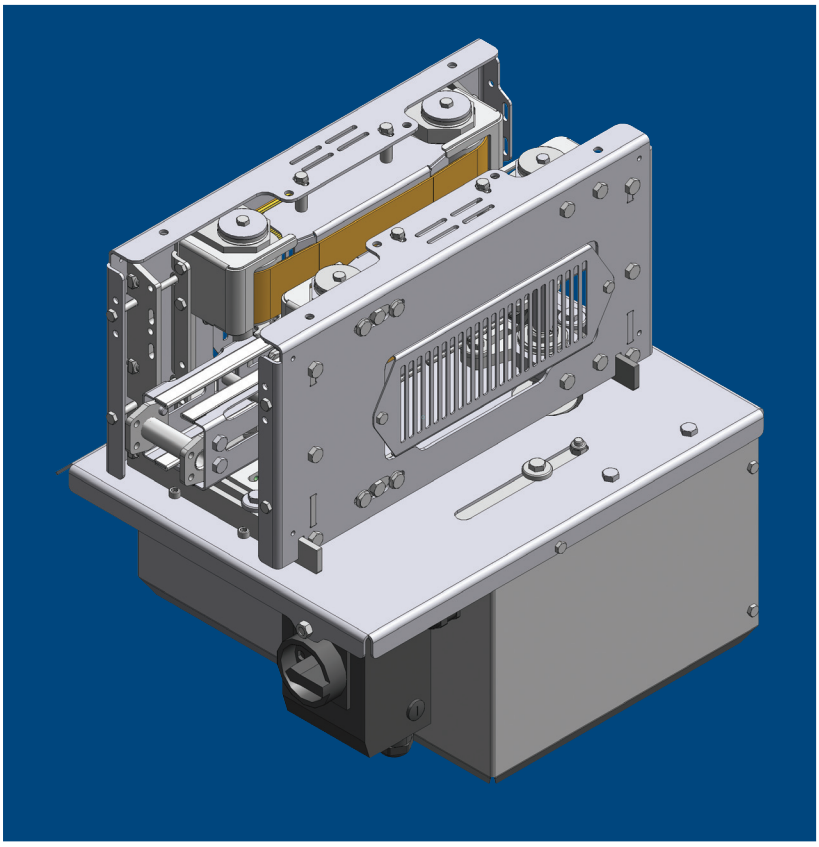

Belt Brake

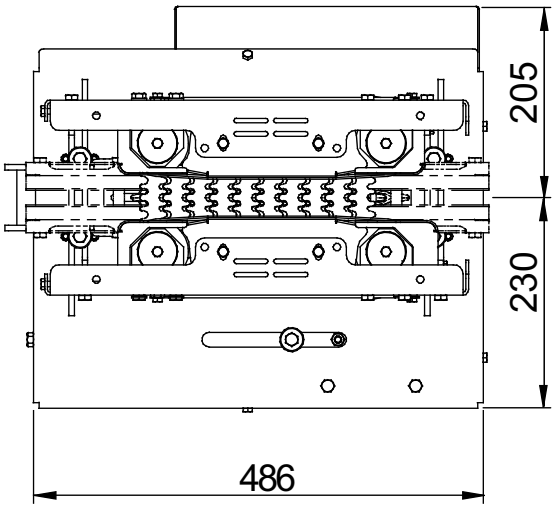

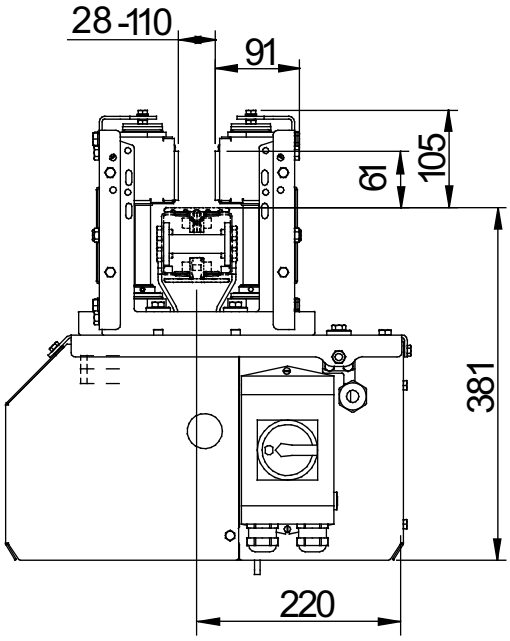

Direction of transportation

Part number	Variants m/min	Volume dm³	Weight kg
F206677-101	9,5-47	175	45
F206677-102	1,5-7	175	45
F206677-103	20	175	45

Other speeds after recommendation.

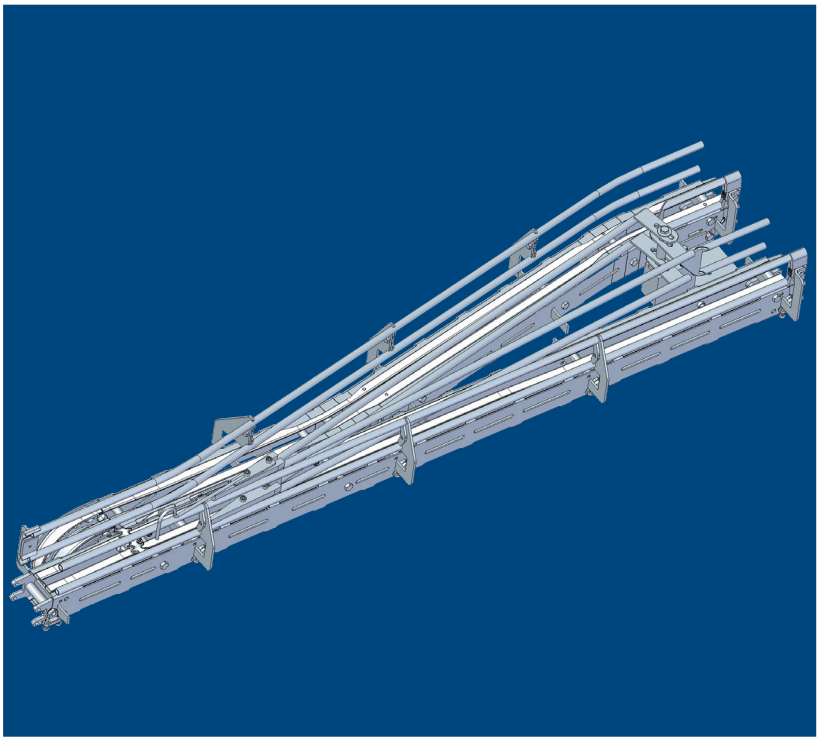

Manuel Switch 1-2

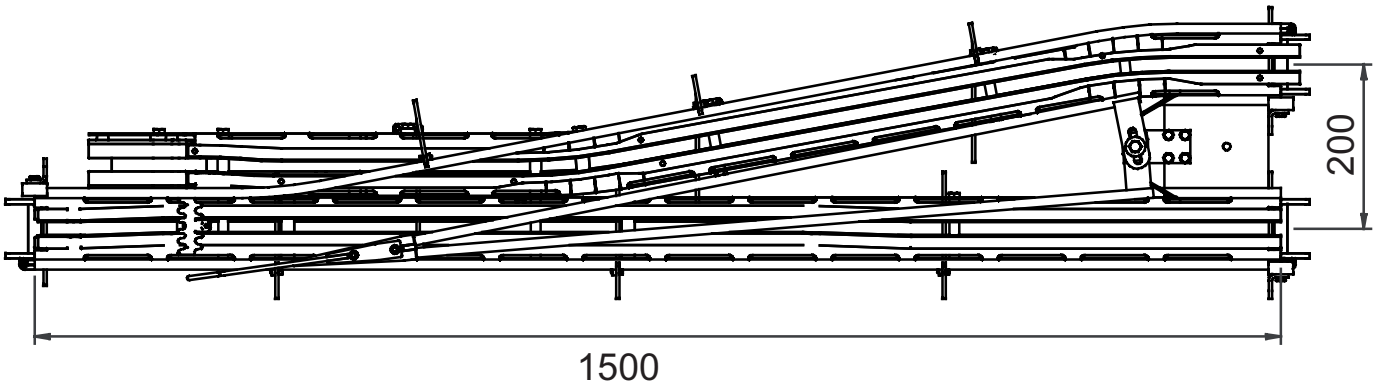

Part number	Chain Lenght m	Volume dm^3	Weight kg
F209420-101	6,5	101	25
F209420-102	6,5	101	25

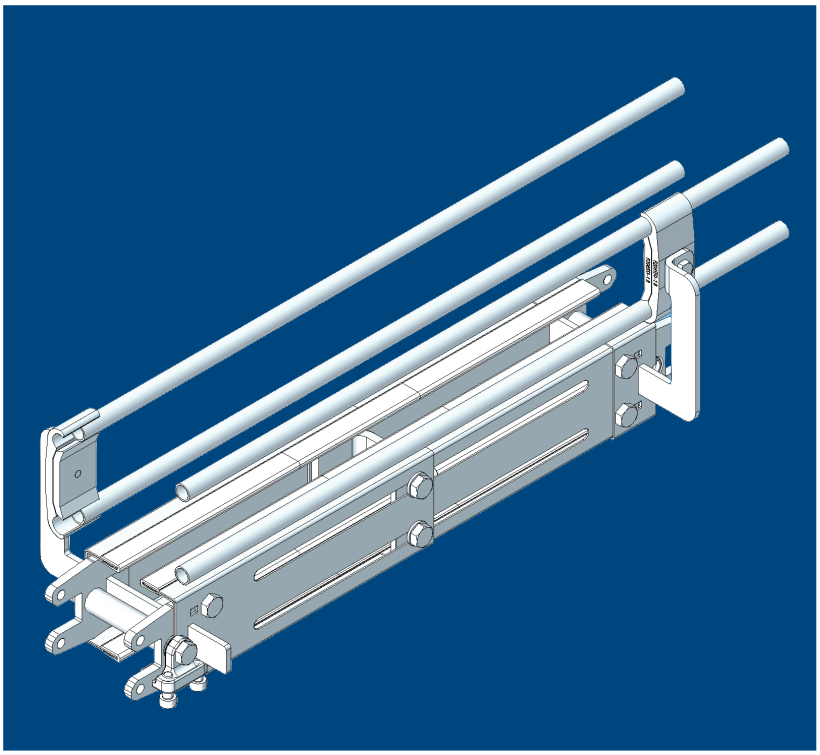

Telescopic Conveyor

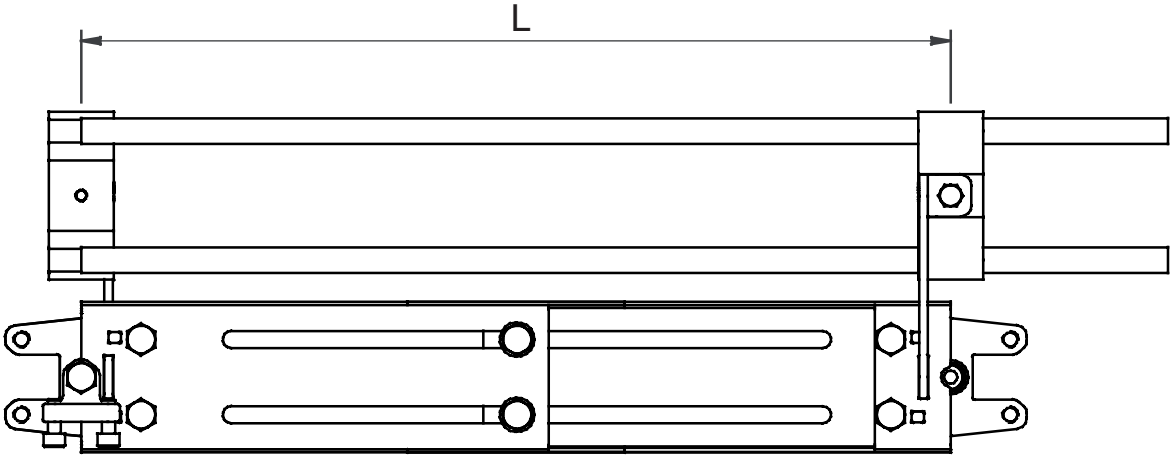

Part number	Lenght m	Chain Lenght m	Volume dm^3	Weight kg
F208443-105	L = 250-400	1,0	26	4,5
F208443-106	L = 400-700	1,0	26	4,5

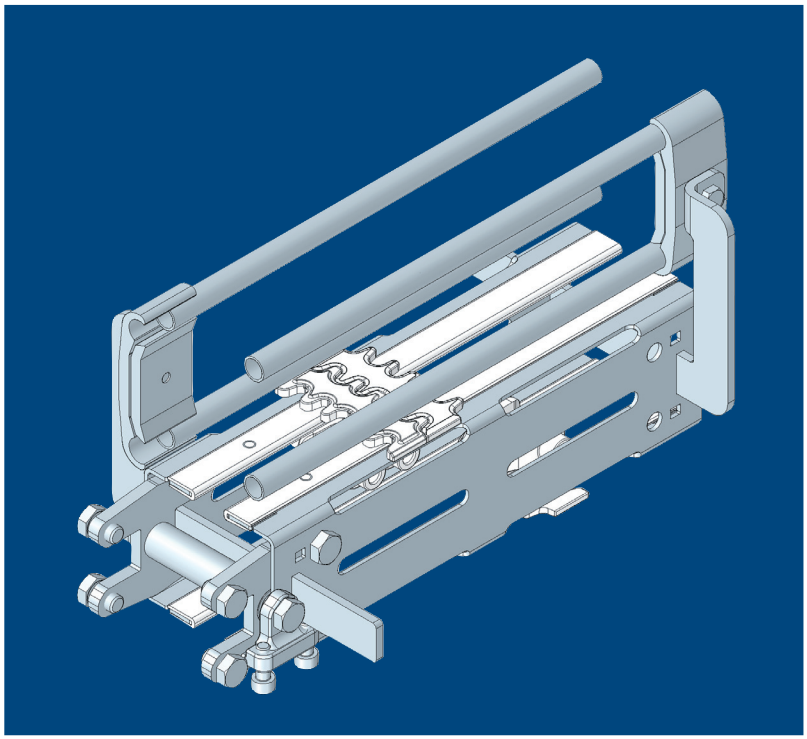

Straight Conveyor

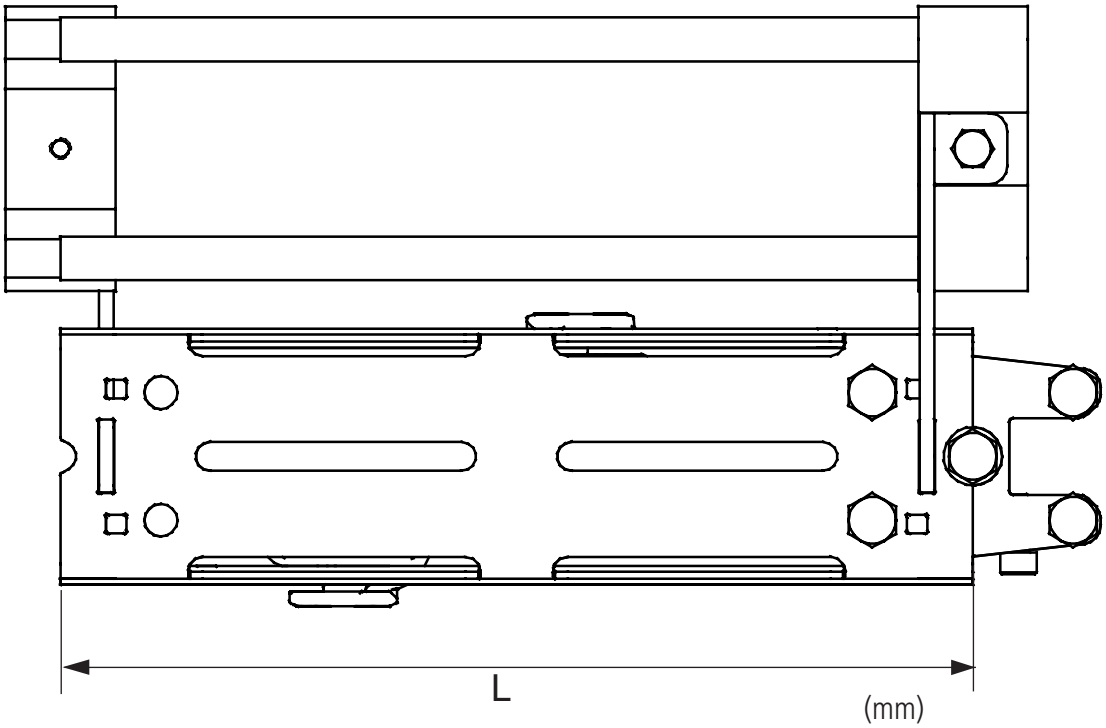

Part number	Variants m	Chain Lenght	Volume dm^3	Weight kg/m
F208443-101	L=0,25	Lx2	0,015 x L (mm)	3,5
F208443-102	L=0,5	Lx2	0,015 x L (mm)	3,5
F208443-103	L=1	Lx2	0,015 x L (mm)	3,5
F208443-104	L=3	Lx2	0,015 x L (mm)	3,5

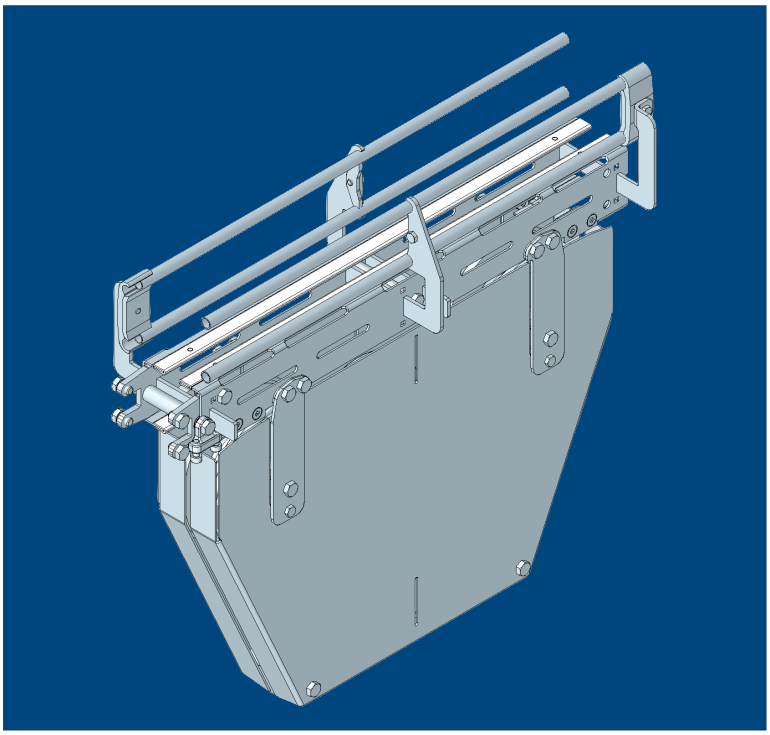

Straight Conveyor with Tensioner

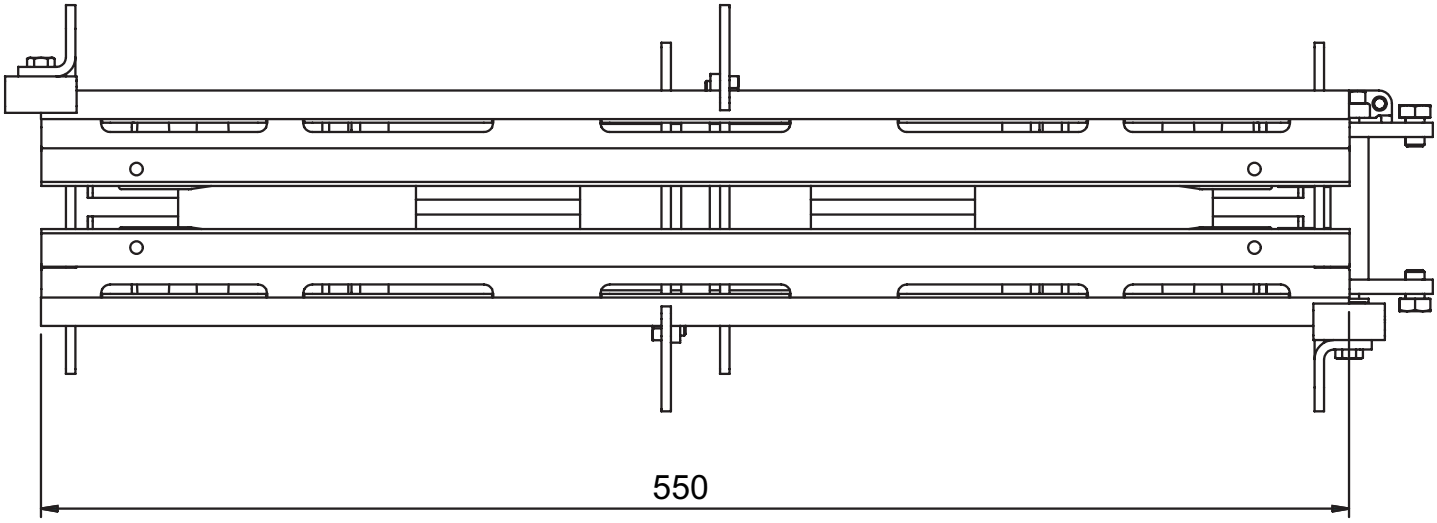

(mm)

Part number	Chain Lenght m	Volume dm³	Weight kg
F208444-101	1,5	80	21

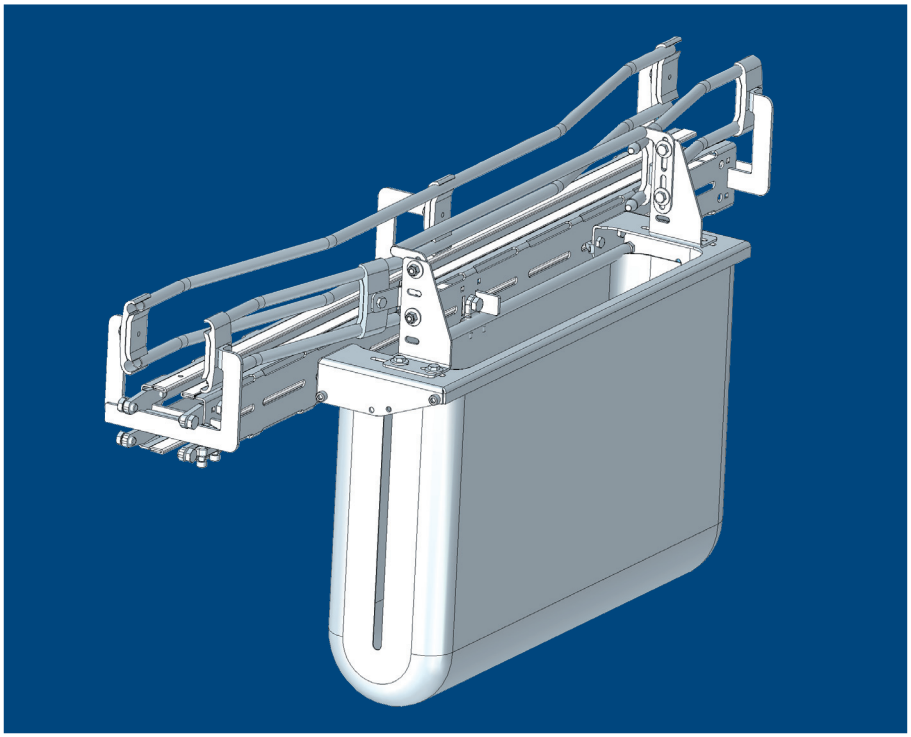

Package Trap

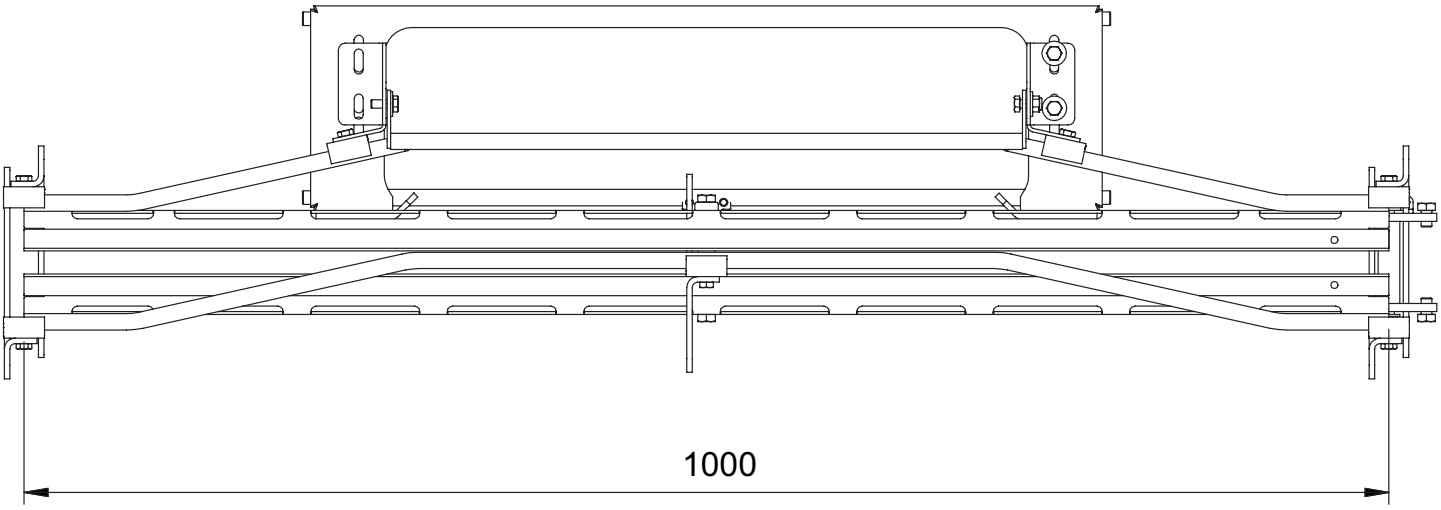

(mm)

Part number	Chain Lenght m	Volume dm^3	Weight kg
F208445-101	2	200	8

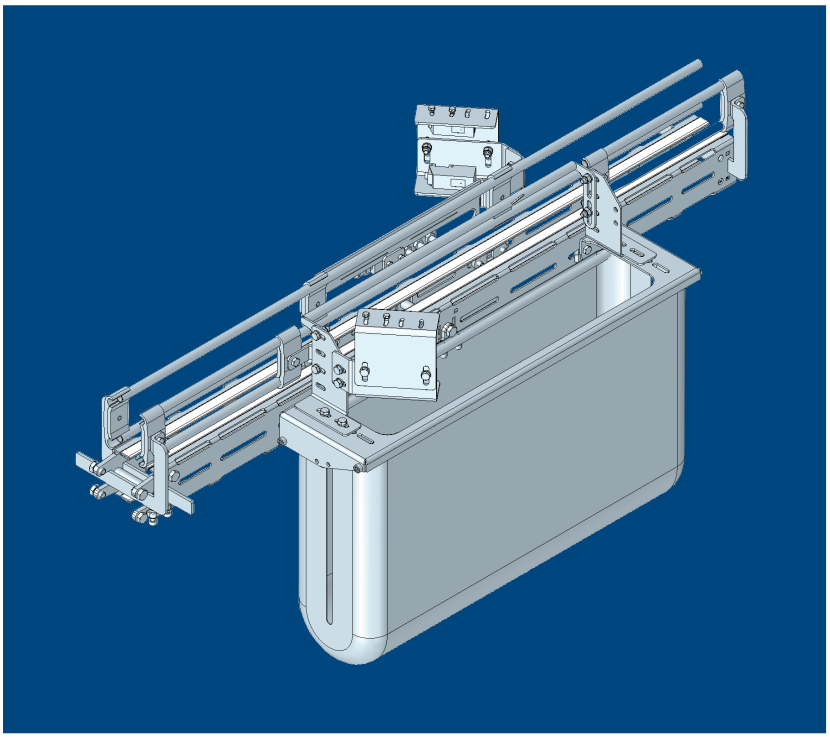

Blowoff with Air

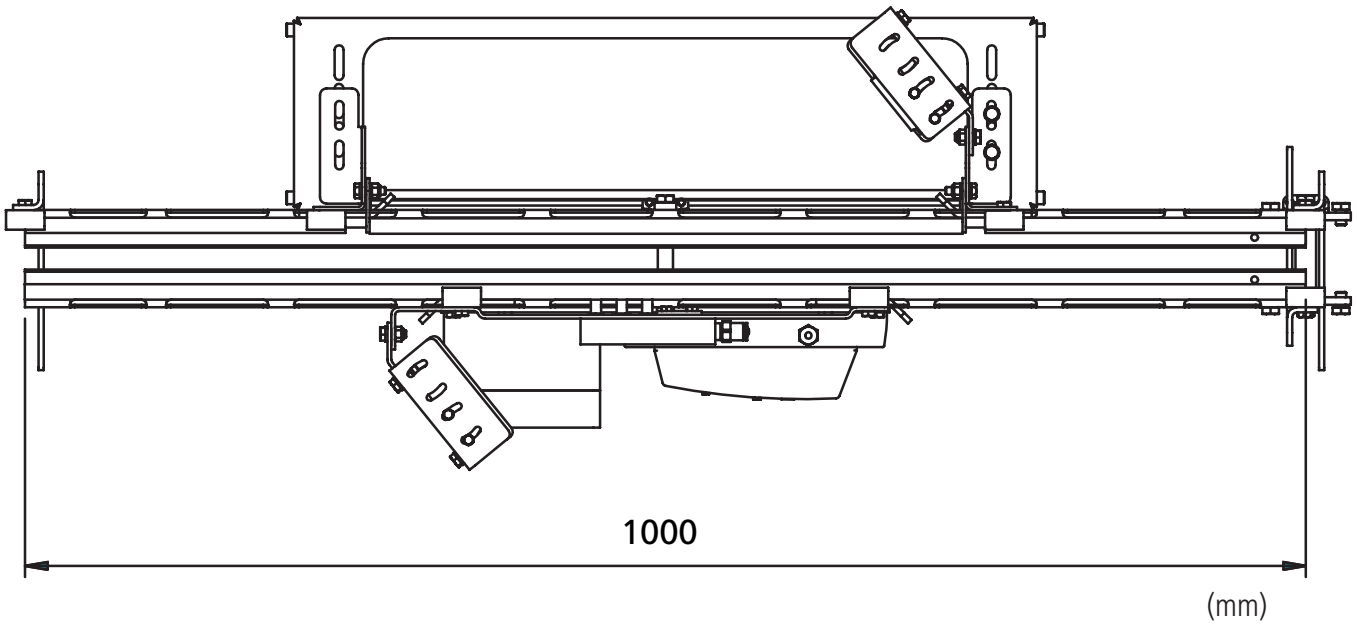

Part number	Chain Lenght m	Volume dm³	Weight kg
F208446-101	2	170	9,5

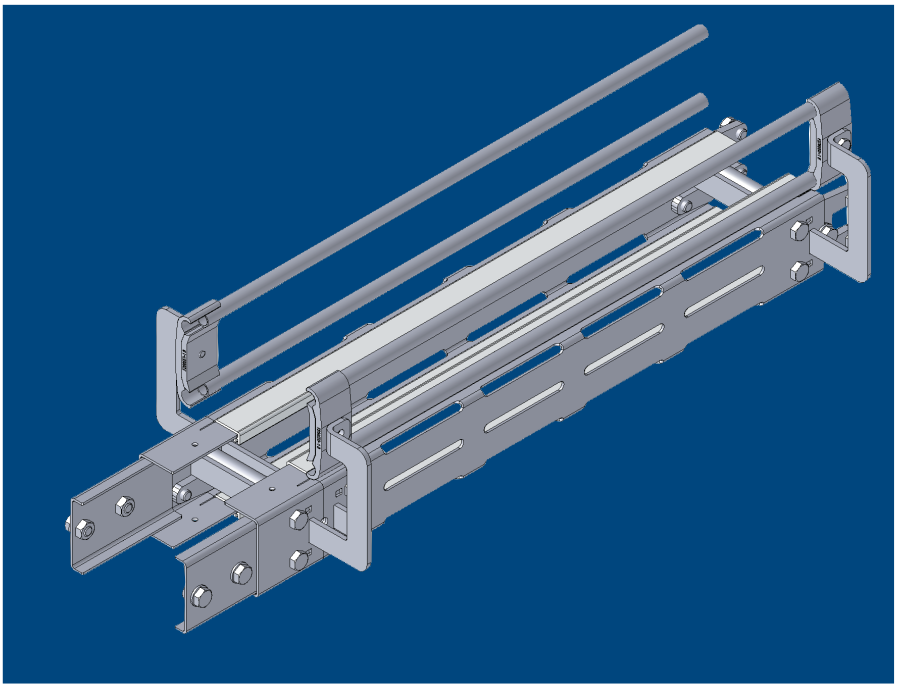

Joint Kit

The joint kit is used to join cut conveyors

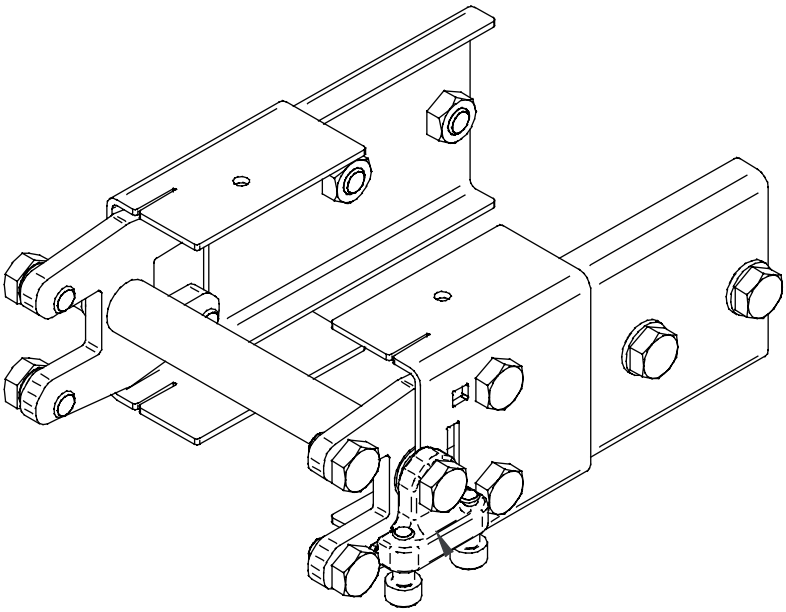

Part number	Volume dm^3	Weight kg
F209713-101	0,9	1,0

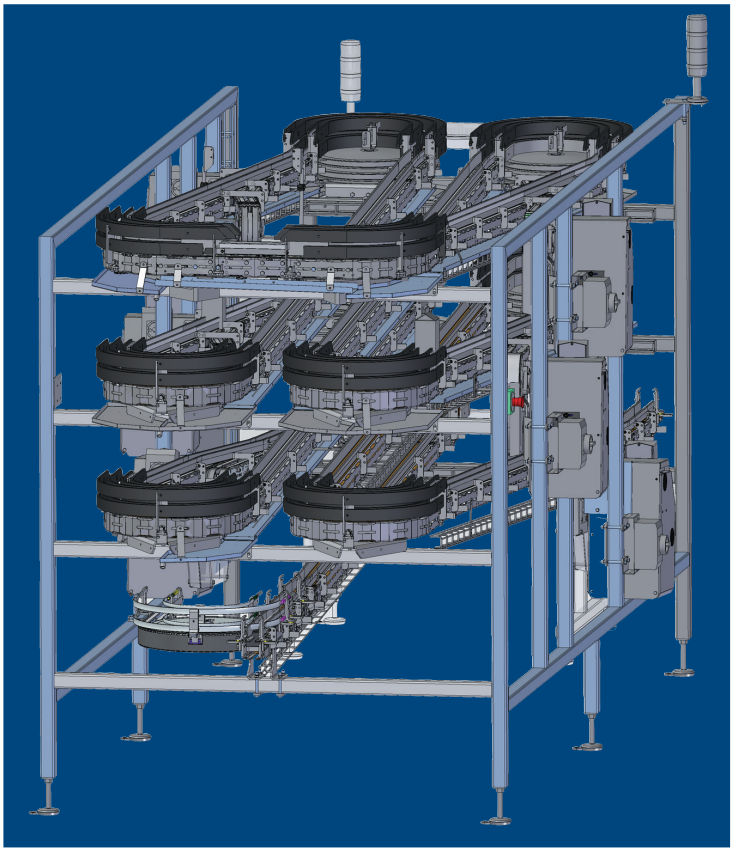

Accumulator

Our accumulator is in the standard version intended for accumulation of single packages up to two minutes at a short line stop.

The electrical connections are intended to 3x230/400V.

The stand is made of aluminium and the casing and the motor shelf of grounded stainless steel. The motor is a frequecy controlled Nord/Gear drive motor.

The complete conveyor lenght is normally 50 meter. Since the model is application dependent please contact Fredriksons for more information.

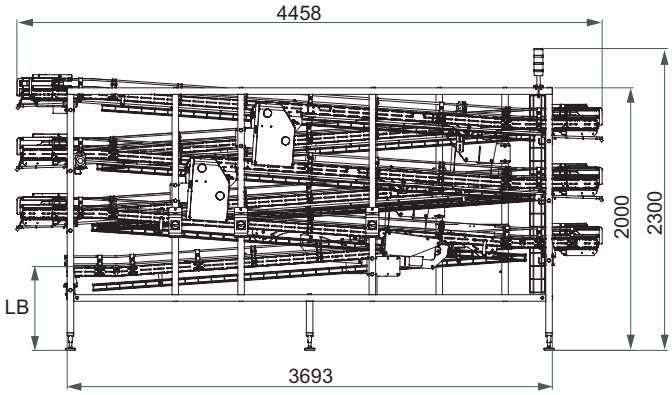

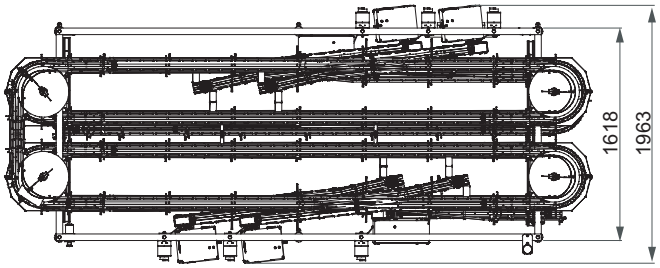

Type	Normal capacity LH	Speed v m/min	Goods and dimension max. LxBxH (mm)	Level in LB (mm)	Power kW	Products/min
F207406	appr. 2 min	max 25	110 x 110 x 250	638	6x0,37	max 20

Vertical Conveyor Unit

Our Vertical Conveyor Unit is intended for vertical transport of single packages.

The unit can either be installed with a separate electrical cabinet or with an electrical cabinet integrated in the conveyor system. The electrical connections are intended to 3x230/400V.

The stand is made of aluminium and the casing and the motor shelf of grounded stainless steel. The motor is a Nord/Gear drive motor.

The capacity, range of lifting etc are dependent of goods. Please contact Fredriksons for detailed information.

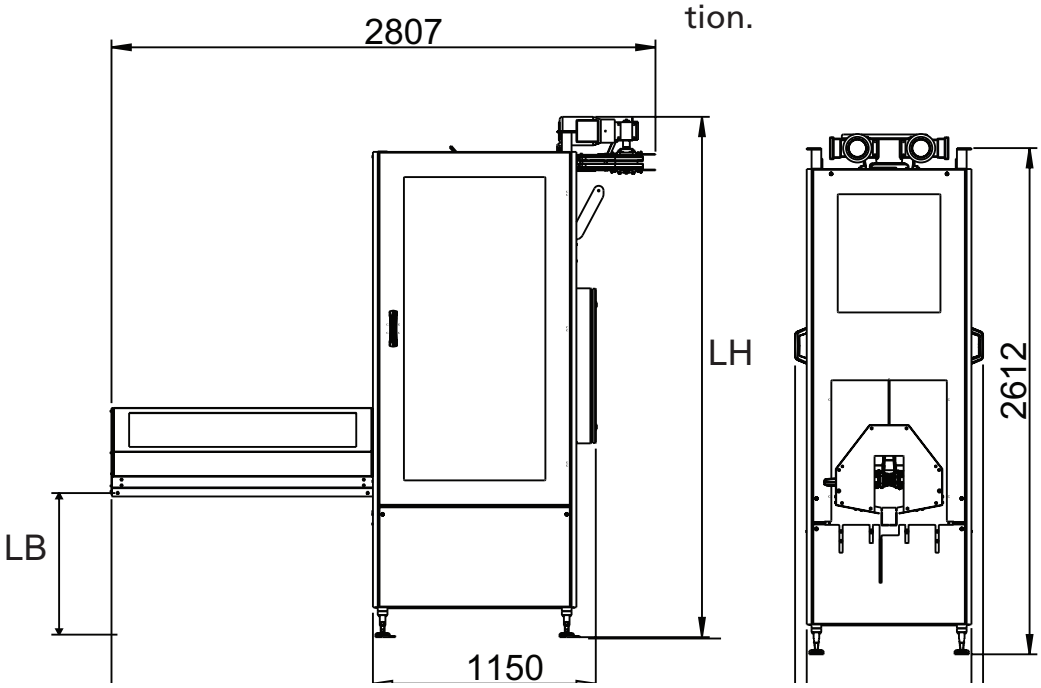

Type	Range of lift LH (mm)	Speed v m/min	Goods and dimension max. LxBxH (mm)	Level in LB (mm)	Power kW	Products/min
F209221	max 6000	60	110 x 110 x 250	800-950	2 x 0,55 kW	max 400

FREDRIKSONS
CONVEYOR SOLUTIONS

Fredriksons Verkstads AB • P.O Box 148 • SE-592 23 Vadstena
Phone: +46 143 296 00 • Fax: +46 143 296 09
info@fredriksons.se • www.fredriksons.se